Tektronix®

TDP1500
1.5 GHz Differential Probe
Quick Start User Manual



071-2209-01

Tektronix®

TDP1500
1.5 GHz Differential Probe
Quick Start User Manual

www.tek.com

071-2209-01

Copyright © Tektronix. All rights reserved. Licensed software products are owned by Tektronix or its subsidiaries or suppliers, and are protected by national copyright laws and international treaty provisions.

Tektronix products are covered by U.S. and foreign patents, issued and pending. Information in this publication supersedes that in all previously published material. Specifications and price change privileges reserved.

TEKTRONIX and TEK are registered trademarks of Tektronix, Inc.

TekVPI and TwinFoot are trademarks of Tektronix, Inc.

TwinTip is a registered trademark of Tektronix, Inc.

Contacting Tektronix

Tektronix, Inc.
14150 SW Karl Braun Drive
P.O. Box 500
Beaverton, OR 97077
USA

For product information, sales, service, and technical support:

- In North America, call 1-800-833-9200.
- Worldwide, visit www.tek.com to find contacts in your area.

Warranty

Tektronix warrants that this product will be free from defects in materials and workmanship for a period of one (1) year from the date of shipment. If any such product proves defective during this warranty period, Tektronix, at its option, either will repair the defective product without charge for parts and labor, or will provide a replacement in exchange for the defective product. Parts, modules and replacement products used by Tektronix for warranty work may be new or reconditioned to like new performance. All replaced parts, modules and products become the property of Tektronix.

In order to obtain service under this warranty, Customer must notify Tektronix of the defect before the expiration of the warranty period and make suitable arrangements for the performance of service. Customer shall be responsible for packaging and shipping the defective product to the service center designated by Tektronix, with shipping charges prepaid. Tektronix shall pay for the return of the product to Customer if the shipment is to a location within the country in which the Tektronix service center is located. Customer shall be responsible for paying all shipping charges, duties, taxes, and any other charges for products returned to any other locations.

This warranty shall not apply to any defect, failure or damage caused by improper use or improper or inadequate maintenance and care. Tektronix shall not be obligated to furnish service under this warranty a) to repair damage resulting from attempts by personnel other than Tektronix representatives to install, repair or service the product; b) to repair damage resulting from improper use or connection to incompatible equipment; c) to repair any damage or malfunction caused by the use of non-Tektronix supplies; or d) to service a product that has been modified or integrated with other products when the effect of such modification or integration increases the time or difficulty of servicing the product.

THIS WARRANTY IS GIVEN BY TEKTRONIX WITH RESPECT TO THE PRODUCT IN LIEU OF ANY OTHER WARRANTIES, EXPRESS OR IMPLIED. TEKTRONIX AND ITS VENDORS DISCLAIM ANY IMPLIED WARRANTIES OF MERCHANTABILITY OR FITNESS FOR A PARTICULAR PURPOSE. TEKTRONIX' RESPONSIBILITY TO REPAIR OR REPLACE DEFECTIVE PRODUCTS IS THE SOLE AND EXCLUSIVE REMEDY PROVIDED TO THE CUSTOMER FOR BREACH OF THIS WARRANTY. TEKTRONIX AND ITS VENDORS WILL NOT BE LIABLE FOR ANY INDIRECT, SPECIAL, INCIDENTAL, OR CONSEQUENTIAL DAMAGES IRRESPECTIVE OF WHETHER TEKTRONIX OR THE VENDOR HAS ADVANCE NOTICE OF THE POSSIBILITY OF SUCH DAMAGES.
[W2 – 15AUG04]

Table of Contents

General safety summary iii
Environmental considerations vi
Preface vii
Documentation vii
Conventions used in this manual vii
Returning the probe for servicing viii
Key features 1
Operating considerations 2
Installation 3
Connecting to the host instrument 3
Probe controls and indicators 4
Functional check 7
Required equipment 7
Calibration 9
Prerequisites 9
Required equipment 9
Test procedure 10
Basic operation 13
Probe head assembly 13

Probe input 14
Probe offset 17
Applications 19
Accessories and options 24
Using standard accessories 24
Optional accessories 33
Options 38
Probing principles 39
Probe grounding 39
Input impedance and probe loading 40
Maintenance 41
Host instrument firmware 41
Error condition 41
Replacement parts 42
Care and cleaning 42
Index

General safety summary

Review the following safety precautions to avoid injury and prevent damage to this product or any products connected to it.

To avoid potential hazards, use this product only as specified.

Only qualified personnel should perform service procedures.

While using this product, you may need to access other parts of a larger system. Read the safety sections of the other component manuals for warnings and cautions related to operating the system.

To avoid fire or personal injury

Connect and disconnect properly. Do not connect or disconnect probes or test leads while they are connected to a voltage source.

Ground the product. This product is indirectly grounded through the grounding conductor of the mainframe power cord. To avoid electric shock, the grounding conductor must be connected to earth ground. Before making connections to the input or output terminals of the product, ensure that the product is properly grounded.

Observe all terminal ratings. To avoid fire or shock hazard, observe all ratings and markings on the product. Consult the product manual for further ratings information before making connections to the product.

Connect the probe reference lead to earth ground only.

Do not apply a potential to any terminal, including the common terminal, that exceeds the maximum rating of that terminal.

Do not operate without covers. Do not operate this product with covers or panels removed.

Do not operate with suspected failures. If you suspect that there is damage to this product, have it inspected by qualified service personnel.

Avoid exposed circuitry. Do not touch exposed connections and components when power is present.

Do not operate in wet/damp conditions.

Do not operate in an explosive atmosphere.

Keep product surfaces clean and dry.

Terms in this manual

These terms may appear in this manual:



WARNING. *Warning statements identify conditions or practices that could result in injury or loss of life.*



CAUTION. *Caution statements identify conditions or practices that could result in damage to this product or other property.*

Symbols and terms on the product

These terms may appear on the product:

- DANGER indicates an injury hazard immediately accessible as you read the marking.
- WARNING indicates an injury hazard not immediately accessible as you read the marking.
- CAUTION indicates a hazard to property including the product.

The following symbol(s) may appear on the product:



CAUTION
Refer to Manual

Environmental considerations

This section provides information about the environmental impact of the product.

Product End-of-Life handling

Observe the following guidelines when recycling an instrument or component:

Equipment recycling. Production of this equipment required the extraction and use of natural resources. The equipment may contain substances that could be harmful to the environment or human health if improperly handled at the product's end of life. To avoid release of such substances into the environment and to reduce the use of natural resources, we encourage you to recycle this product in an appropriate system that will ensure that most of the materials are reused or recycled appropriately.



This symbol indicates that this product complies with the applicable European Union requirements according to Directives 2012/19/EU and 2006/66/EC on waste electrical and electronic equipment (WEEE) and batteries. For information about recycling options, check the Tektronix Web site (www.tek.com/productrecycling).

Preface

This manual describes the installation and operation of the TDP1500 Differential probe. Basic probe operations and concepts are presented in this manual. You can also check the Tektronix Web site for this document and other related information.

Documentation

To read about	Read these documents *
First Time Operation, Functional Check, Operating Basics	This manual.
Specifications, Performance Verification	The technical reference manual.
In-depth oscilloscope operation, user interface, GPIB commands	The online help (from the Help menu on the host instrument).

* To access the documentation that is installed on your instrument, click **Start** in the taskbar and select **Programs > TekApplications**.

Conventions used in this manual

The following icon is used throughout this manual to indicate a step sequence.



Returning the probe for servicing

If your probe requires servicing, you must return the probe to Tektronix. If the original packaging is unfit for use or not available, use the following packaging guidelines:

Preparation for Shipment

1. Use a corrugated cardboard shipping carton having inside dimensions at least one inch greater than the probe dimensions. The box should have a carton test strength of at least 200 pounds.
2. Put the probe into an antistatic bag or wrap it to protect it from dampness.
3. Place the probe in the box and stabilize it with light packing material.
4. Seal the carton with shipping tape.
5. Refer to *Contacting Tektronix* at the beginning of this manual for the shipping address.

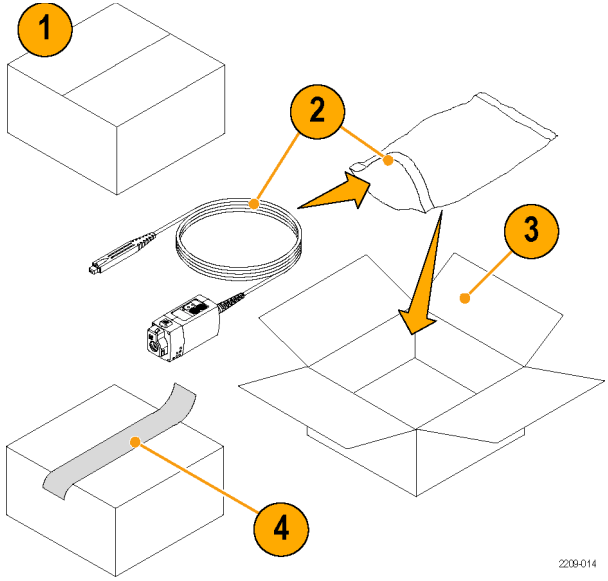

Key features

The TDP1500 Differential probe enables you to make accurate differential measurements from DC to 1.5 GHz using oscilloscopes featuring the new Tektronix TekVPI oscilloscope interface. Key features include:

- DC to 1.5 GHz bandwidth
- Selectable 850 mV/8.5 V range (1X/10X gain)
- 200 kΩ differential input resistance
- <1 pF differential input capacitance
- >30 dB CMRR @ 1 GHz (1X), >18 dB (10X)
- Provides automatic units scaling on the oscilloscope display



Operating considerations

Table 1: TDP1500

Characteristic	Description
Input Voltage	Differential: ±0.85 V (DC + peak AC), 0.6 V RMS ±8.5 V (DC + peak AC), 6 V RMS Operating Voltage Input Range: ±7 V (DC + peak AC), (Both ranges; either input referenced to ground)
Temperature	Operating: 0 to +40 °C (+32 °F to +104 °F) Nonoperating: -40 °C to +71 °C (-40 °F to +160 °F)
Humidity	Operating: up to +40 °C (+104 °F) 5-90% RH Nonoperating: up to +60 °C (+140 °F) 5-90% RH
Altitude	Operating: Up to 3000 meters (10,000 feet) Nonoperating: Up to 15230 meters (50,000 feet)
Pollution Degree	2, Indoor use only

Installation

Connecting to the host instrument

NOTE. Your TekVPI instrument may require a firmware upgrade to support full functionality of the TDP1500 probe. Before you connect the probe, check the version requirements. (See page 41, Host instrument firmware.)

1. Slide the probe into the TekVPI receptacle. The probe snaps when fully engaged.

   When you connect the probe, the host instrument reads information from the probe and identifies the probe type.

2. To disconnect, press the latch release button and pull the probe away from the instrument.

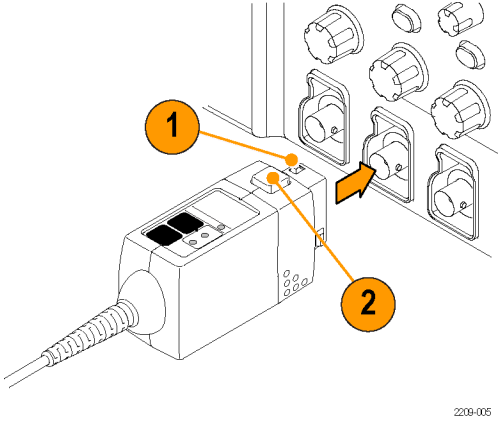

Probe controls and indicators

Status LED

When the probe is powered on, the Status LED glows green, then dark, and then green and remains lit green. This indicates that the probe is in normal operating mode.

If the Status LED glows red, a fault may exist. (See page 41, *Error condition*.)



Range button and LEDs

When the probe is powered on, the Range LEDs briefly light during the power-on self test routine, and then one of the LEDs remains lit.

Press the Range button to toggle the range selection. The corresponding LED lights to indicate the selected range.

NOTE. *The host instrument sets all probe settings to the last known state for the probe/channel combination. If none of the Range LEDs are lit, the instrument may have detected an error condition. Disconnect and reconnect the probe to clear the error.*

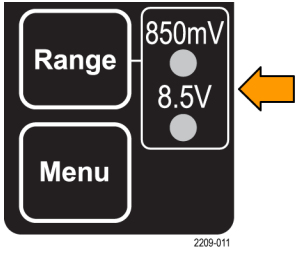

Menu button

1. Press the probe **Menu** button to display the Probe Control screen on the oscilloscope.

NOTE. *Probe menu screens vary slightly between oscilloscope series; samples of DPO7000 Series screens are shown here.*

This screen includes controls for probe functions that are not accessible on the probe, such as Offset. Other functions can be controlled from both locations.

2. Use the touch-screen buttons on the instrument to set the probe parameters.

3. Press the probe **Menu** button again to close the Probe Control screen.

NOTE. *If the probe Menu button does not bring up or remove the Menu on the oscilloscope, check for oscilloscope firmware updates.*

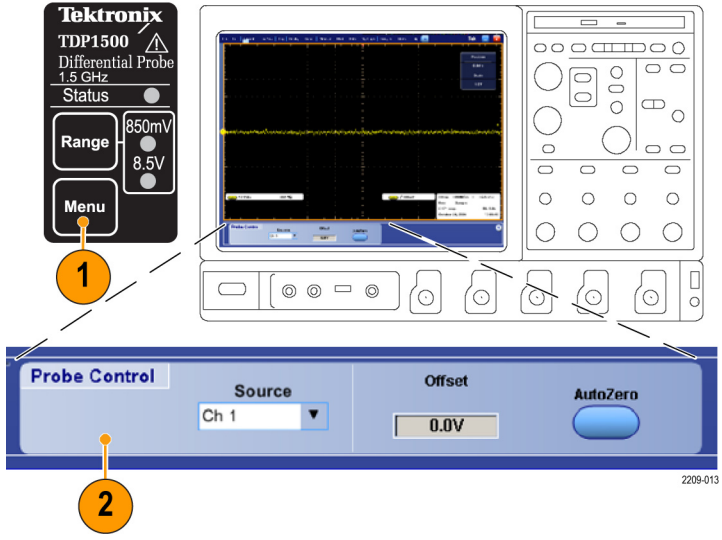

Functional check

Use the following procedure to check that your probe is functioning properly. If you want to verify that your probe meets the warranted specifications, refer to the *Performance Verification* procedures in the *TDP1500 Probe Technical Reference Manual*.

Required equipment

Description and quantity	Performance requirement	Recommended example [1]
Oscilloscope	TekVPI Interface	Tektronix DPO7000 Series
Y-lead adapter	0.25-in square pins for probe tip connections	196-3434-XX [2]
MicroCKT Test Tip (2)	0.25-in square pins-to-mini clips	206-0569-XX [2]

1 Nine-digit part numbers (xxx-xxxx-xx) are Tektronix part numbers.

2 Standard probe accessory

Signal

1. Connect the probe to any channel (1–4) on the oscilloscope and set the oscilloscope to display that channel.
2. Use the Y-lead Adapter and two MicroCKT Test Tips to connect the probe tip to the PROBE COMP terminals on the oscilloscope.
3. Press **AUTOSET** (or adjust the oscilloscope) to display the compensation waveform. A stable waveform indicates that your probe is functioning properly.

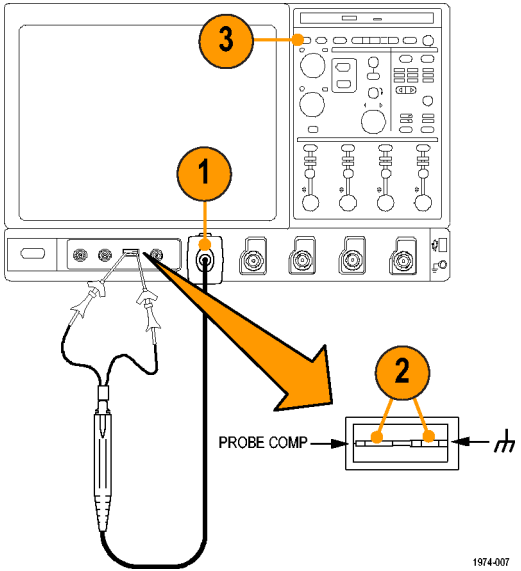

Calibration

The probe calibration routine minimizes your measurement errors by optimizing the gain and offset of the probe and oscilloscope combination. We recommend that you repeat the probe calibration on each channel that you use. Individual calibration constants are stored for each probe on each channel.

NOTE. *Probe calibration functions are not available on all oscilloscope models.*

Prerequisites

The equipment must be warmed up for 20 minutes, and the calibration status of the host instrument must be pass.

Required equipment

The required equipment for calibration is the same as for the functional check. (See page 7, *Required equipment*.)

Test procedure

Check the Calibration Status of the instrument:

1. From the Utilities menu, select Instrument Calibration.
2. In the Status box, check that **Pass** is displayed.
3. If the Instrument Calibration Status is not pass, run the Signal Path Compensation routine: Disconnect all probes and signal sources from the oscilloscope, and select Calibrate. When **Pass** displays in the status box, proceed to the next step.

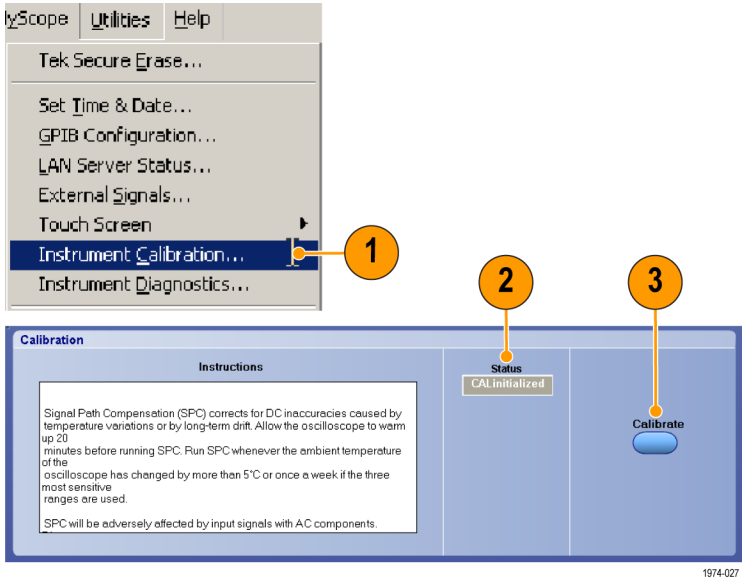

4. Connect the probe to the oscilloscope PROBE COMP connector.
5. From the Vertical menu, select **Probe Cal**.

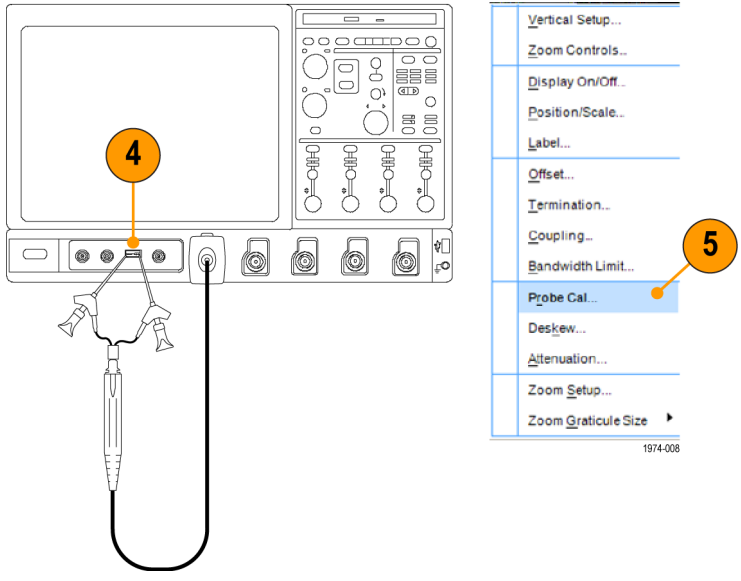

6. When the Probe Setup screen appears, select **Clear ProbeCal**, and then select **Calibrate Probe**.

   The probe calibration routine begins. When the routine completes, the Probe Status changes from Running to Pass. Close the notifier and begin using your probe.

If the Probe Status changes to Fail:

- Check that the adapters are securely attached to the probe tips and to the PROBE COMP connectors on the oscilloscope.
- Verify that the selected channel on the left side of the Probe Setup menu matches the channel that the probe is plugged into.

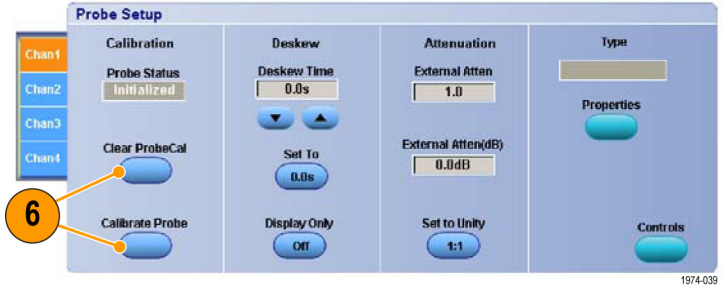

Basic operation

Follow these operating guidelines to get optimum performance from your probe.

Probe head assembly

The probe head is designed for ease of use and high performance. Its small size makes it easy to handle in tight areas.

1. The probe tip sockets are sized to press onto two 0.025 inch pins spaced 0.100 inch apart.
2. The ground socket provides a short ground path for ground connections. Most differential measurements do not require a ground connection, however.

More information on the ground connection is available. (See page 39, *Probe grounding*.)

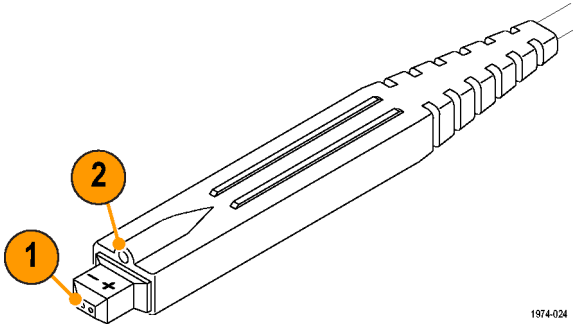

Probe input

The probe is electrically protected against static voltage. However, if you apply voltages above its design limits you may damage the probe tip amplifier. The limits are shown in the 0.85 V and 8.5 V range graphs on the following pages. (See Figure 1 on page 15.) (See Figure 2 on page 16.)

Operating voltage input range

The operating voltage input range is the maximum voltage that you can apply to either of the input pins, with respect to earth ground, without exceeding the linear input range of the amplifier. A signal that is outside this range, if applied to either probe input, can lead to an erroneous output waveform even if the differential input range is met.

Differential-Mode signal range

The differential-mode signal range is the maximum voltage difference between the (+) and (-) input pins that the probe can accept without distorting the signal. The distortion from an input signal that is too large can result in an erroneous measurement.

Common-Mode signal range

The common-mode input voltage is the average of the voltage on the (+) and (-) input pins with respect to ground. The common-mode voltage input range is determined by both the operating voltage input range and the amplitude of the applied differential signal. The peak signal applied to either input pin should not exceed the operating voltage input range, so the common-mode voltage input range is equal to the operating voltage input range reduced by one-half the amplitude of the differential input signal. With low amplitude differential input signals, the common-mode input range is nearly equal to the operating voltage input range. Higher amplitude differential voltages cause the common-mode input range to be reduced.

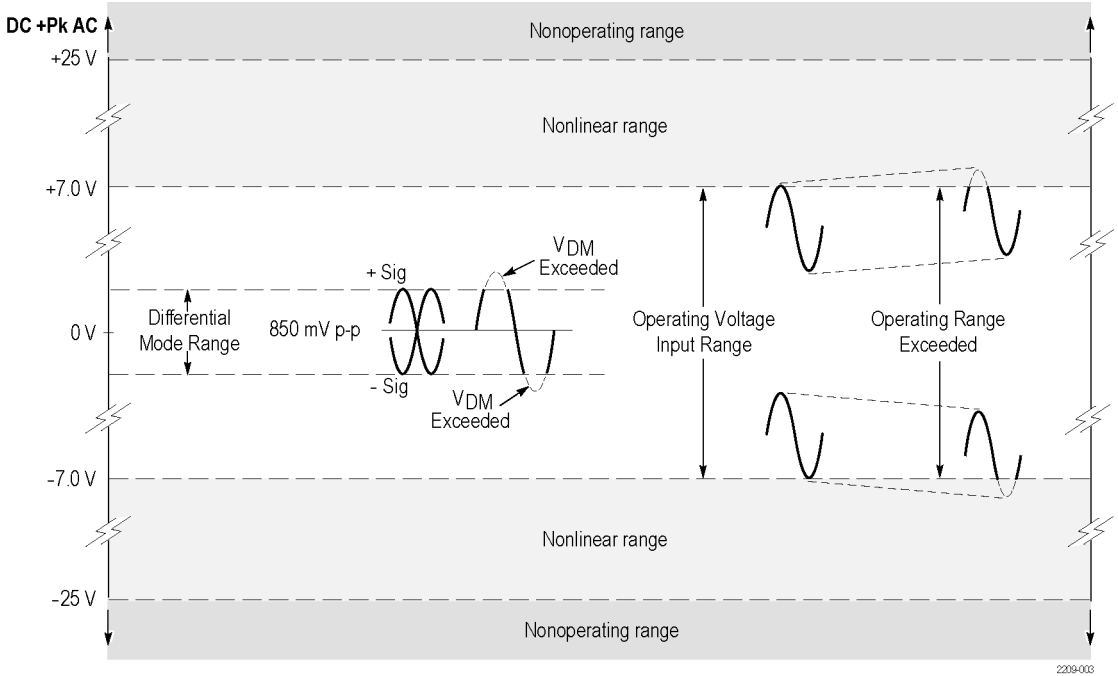

Figure 1: Input voltage limits with no DC offset, 0.85 V Range

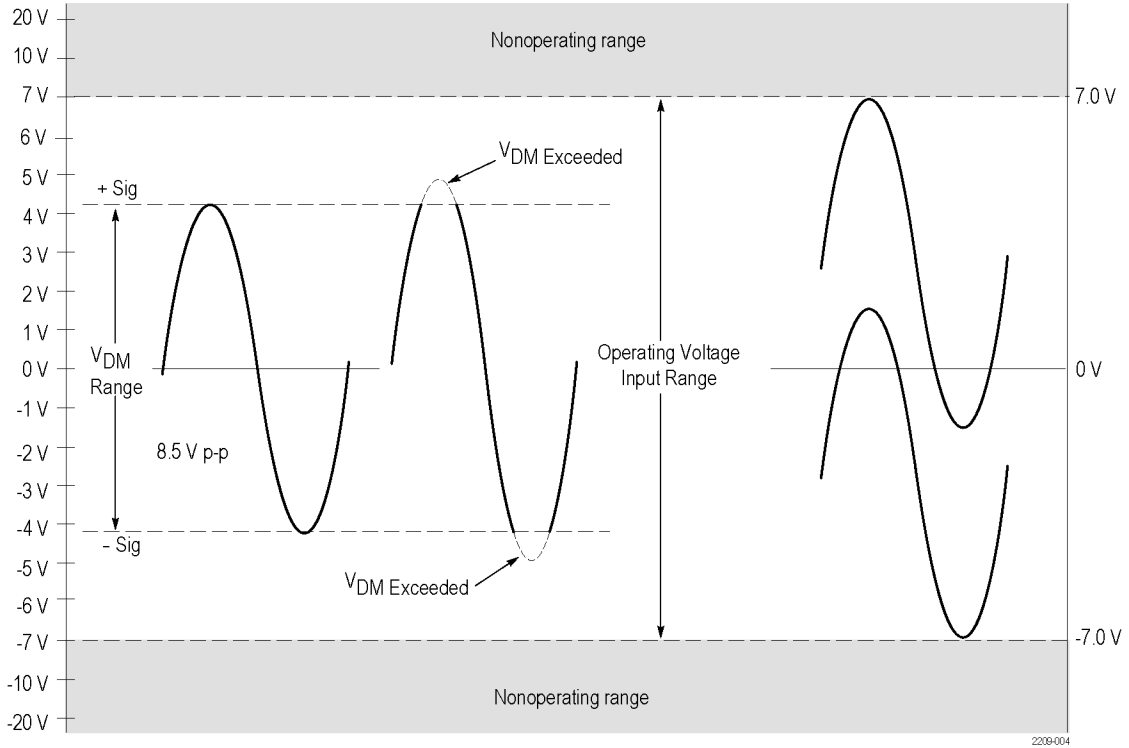

Figure 2: Input voltage limits with no DC offset, 8.5 V Range

Probe offset

The probe offset is adjustable to permit operation within the linear range of the probe. To increase the sensitivity of the probe at higher DC measurement voltages, you should adjust the offset for optimal probe performance.

Offset

NOTE. *See your oscilloscope manual for specific instructions on using the offset control.*

1. To set the probe offset, use the vertical position control to set a zero reference level on the oscilloscope display.

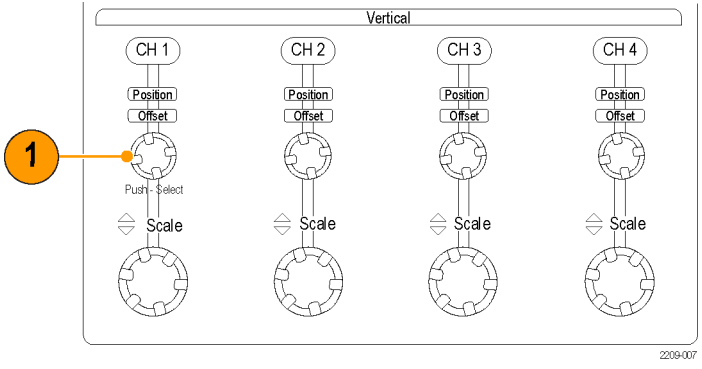

2. Attach the probe to the circuit.
3. Adjust the offset to bring the trace to the oscilloscope zero reference.
4. If you change the volts/division setting, adjust the offset to keep the trace on the zero reference level.

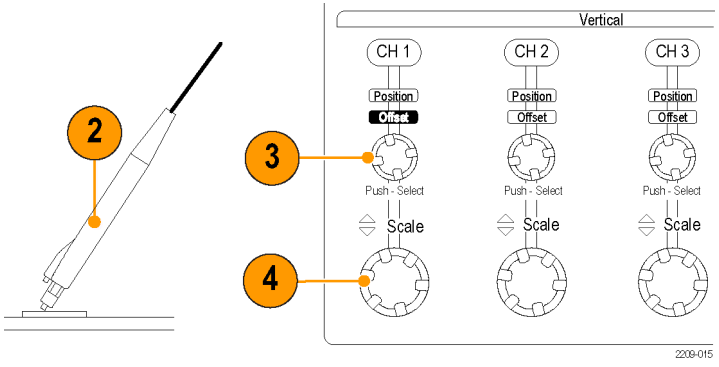

NOTE. The probe has two linear operating ranges: ±0.85 V and ±8.5 V. The offset range is ±7 V for both operating ranges.

Applications

The following example shows a simplified AC/DC circuit diagram that uses the TDP1500 probe and a DPO7000 oscilloscope. The oscilloscope is loaded with the DPOPWR power measurement software application to solve a typical test problem.

Measure switching loss

Measure the power loss at the switching device. Minimizing the power loss will improve the power supply efficiency.

1. Connect the differential probe across the switching device, and a current probe in series with the device. (See Figure 3.)

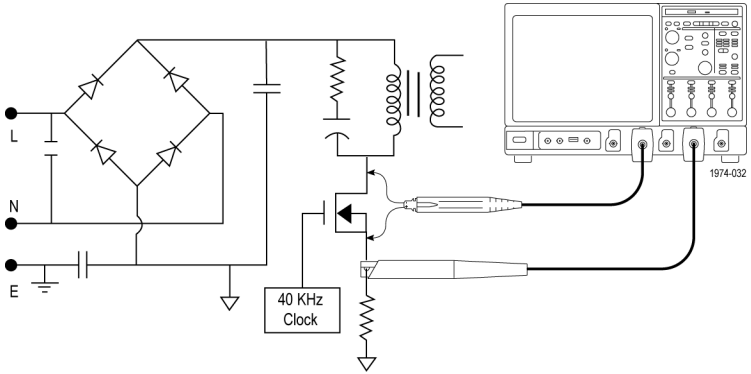

Figure 3: Power supply test points

2. Run the DPOPWR application.
3. Select the Power Device tab.
4. Select the Switching Loss option and press the Configure button.
5. In the Source Configuration Panel, set the appropriate I-Probe Settings.
6. Select the Deskew button to deskew probes and channels.

7. Select the Switching Loss measurement.
8. Select Run to acquire data and display the results. (See Figure 4 on page 21.)



Figure 4: Switching loss results display

Measure signal quality

In this example, you want to use the TDP1500 probe to check the high-speed signal quality of a USB2 device. With the help of a TDSUSB test fixture and a DPO7000 oscilloscope loaded with TDSUSB measurement software, you can easily evaluate the performance of USB2 devices.

1. Connect the TDP1500 probe to one of the test point pairs (+ and –). (See Figure 5.)

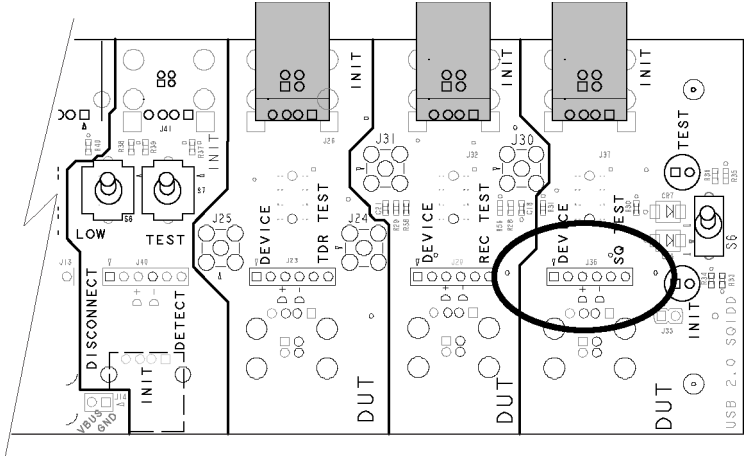

Figure 5: TDSUSB Fixture test points

2. Make the necessary USB connections to the test fixture. (Refer to the TDSUSB manual and application for connection and setup details.)
3. Initialize the High Speed test on the test system, and then execute the test packet routine.
4. Check the oscilloscope to verify that the test packets are being transmitted.
5. Start the TDSUSB application on the oscilloscope.
6. Click OK in the USB Application dialog box.
7. Select Run to acquire data and display the results as shown.

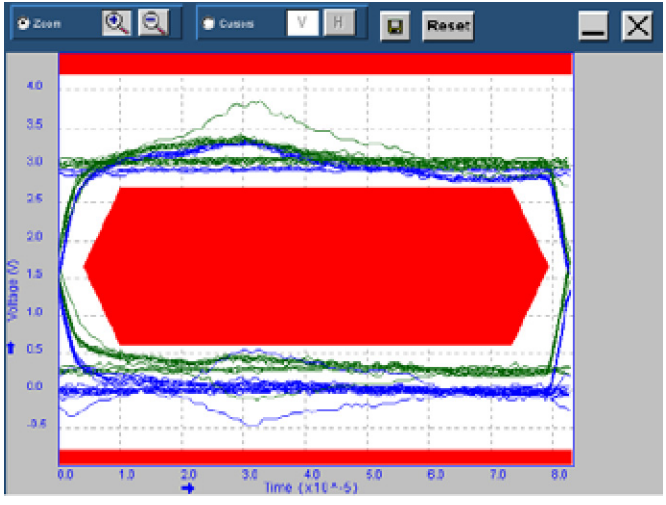

Accessories and options

This section lists the standard accessories and provides information on how to use the accessories. Specifications are provided where appropriate so that you can choose the accessory that best fits your needs. In some cases, reorder kit quantities differ from the quantities of accessories included with the probe.

Using standard accessories

Tip saver

Use the Tip Saver to prolong the life of your probe tip contacts. The Tip Saver bears the wear of repeated connections rather than the probe tips.

1. Connect the Tip Saver to the probe.
2. Connect the probe tip accessory that you want to use.

Two Tip Savers are included with the probe.

Reorder Tektronix part number:

- 016-1781-XX quantity 2

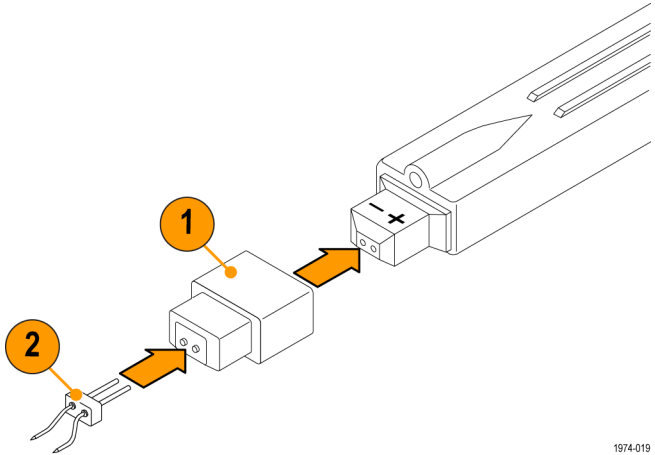

Straight pin probe tips

Use the straight pin probe tips for probing 100 mil-spaced components by hand. You can also use the tips with the other socketed leads and adapters.

WARNING. *The tips have sharp points. To prevent injury, use care when you handle the tips.*

1. Push the tip into the socket until it is seated. You can use either end of the tip. *Do not force the tip*.
2. Probe your circuit.

Eight probe tips are included with the probe.

Reorder Tektronix part number:

- 016-1891-XX quantity 8

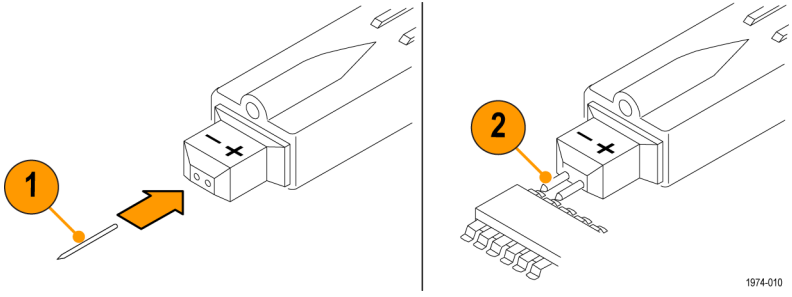

Longhorn adapter

This accessory has fine pins for probing circuit board through-holes (vias). The pin spacing adjusts from 0 to 0.35 in.

WARNING. *The pins have sharp points. To prevent injury, use care when you handle the adapter.*

1. Push the adapter into the probe until it is seated. *Do not force the tip*.
2. Adjust the spacing between the pins to suit your needs.
3. Probe your circuit.

Two adapters are included with the probe.

Reorder Tektronix part number:

- 016-1780-XX quantity 5

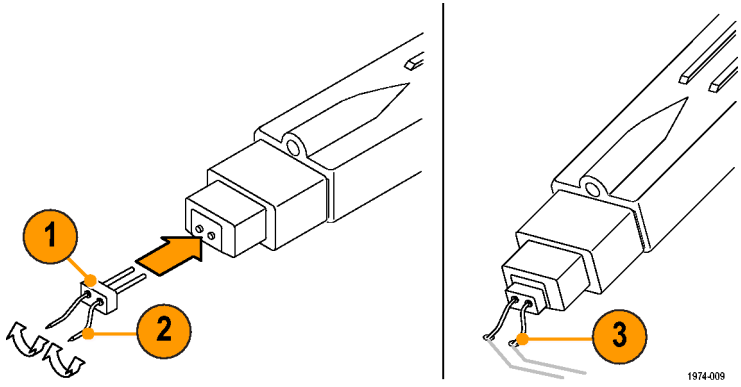

Solder-Down adapter

Use the Solder-Down adapter to probe common test points in your circuit. The adapter is available in two lengths: 1 inch and 3 inches. One of each length is provided with the probe.

The adapters include integral resistors for best signal fidelity. The 1 inch adapter can span up to 1.5 inches between test points, and the 3 inch adapter can span up to 5.5 inches.

NOTE. *The 3 inch adapter performance is best below 500 MHz. The 1 inch adapter performance is best below 1 GHz.*

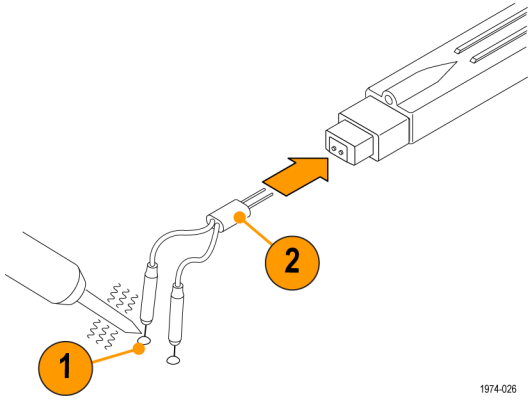

1. Solder the leads to the two test points.
2. Connect the adapter to the probe.

Reorder Tektronix part numbers:

- 1 inch: 196-3504-XX quantity 1
- 3 inch: 196-3505-XX quantity 1

Y-Lead adapter

Use the Y-lead adapter to extend the reach of the probe and to connect to 0.025 inch square pins spaced as far as 1.5 inches apart.

NOTE. *This adapter performance is best below 250 MHz.*

The Y-lead adapter accepts any of the probe tips or adapters.

1. Push the adapter into the probe until it is seated.
2. Connect the adapter to your circuit or to another accessory, such as the MicroCKT Test Tip.

Two adapters are included with the probe.

Reorder Tektronix part number:

- 196-3434-XX quantity 1

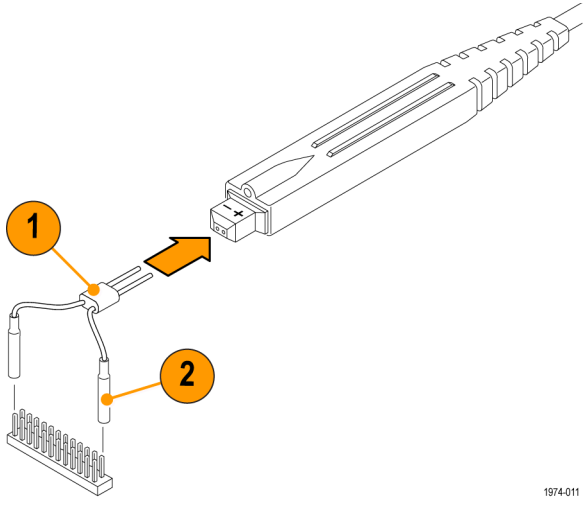

MicroCKT test tip

Use the MicroCKT Test Tips to access dense circuitry and IC leads spaced down to 10 mil-centers.

NOTE. *This adapter performance is best below 100 MHz.*

1. Press the Y-lead into the handle of the MicroCKT Test Tip.
2. Turn the tip body to allow better probe orientation.
3. If necessary, you can slightly bend the tip sleeve to reduce stress on the connection.

Three tips are included with the probe.

Reorder Tektronix part number:

- 206-0569-XX quantity 1

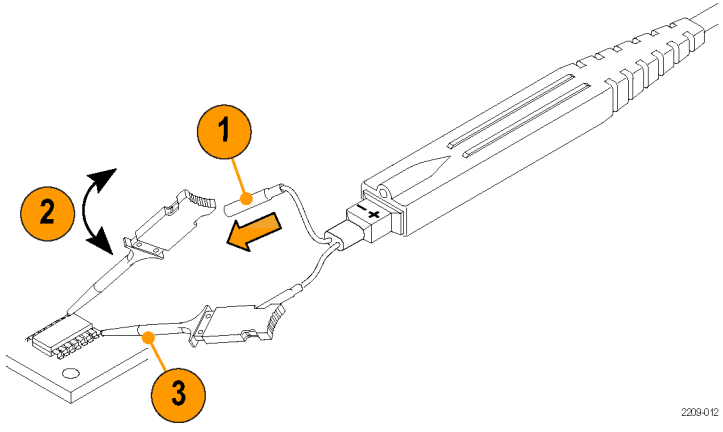

3” ground lead

Use the ground lead for general, lower-frequency probing.

1. Connect the male end of the lead to the ground socket on the probe.
2. Connect the socketed end of the lead to any of the probe tips or adapters. You can also connect to 0.025 inch square pins in your circuit.

When selecting the grounding connection, maintain as short a ground path as possible. (See page 39, *Probe grounding*.)

Two ground leads are included with the probe.

Reorder Tektronix part number:

- 196-3437-10 quantity 2

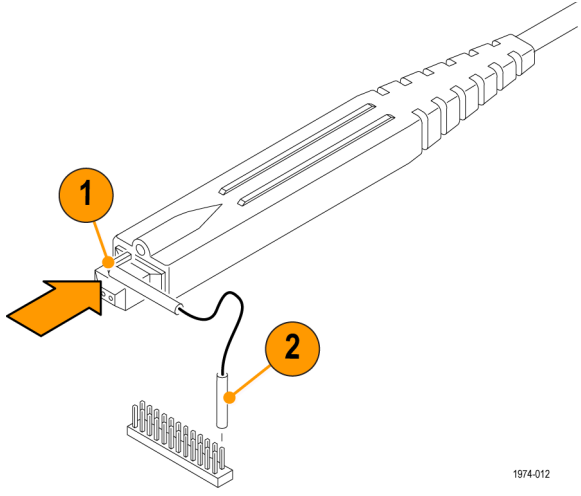

Color band kit

Use the color bands to help identify probes in a multi-probe application.

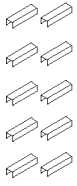

1. Attach one band to the probe cable and another band of the same color near the probe compensation box.
2. Connect the probe to the channel that matches the color of the band.

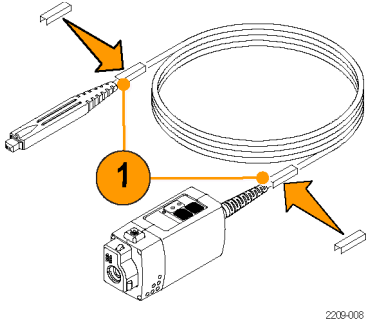

Five colored pairs are included with the probe.

Reorder Tektronix part number:

- 016-1315-XX quantity 5 colored pairs

Pouch, nylon carrying case with inserts

Use the carrying case to hold the probe, the accessories, and the manual.

1. Place the probe, accessories, and manual in the carrying case.
2. Close the carrying case to transport the accessories to another location or for storage.

Reorder Tektronix part number:

- 016-1952-XX

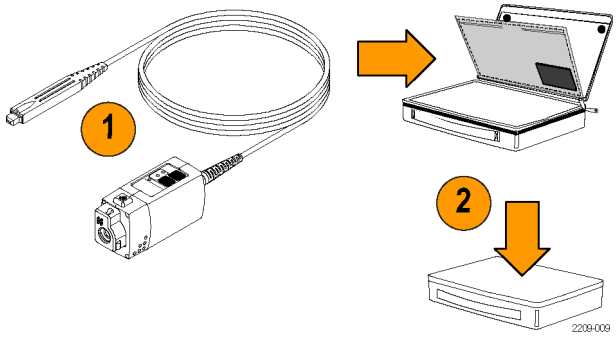

Optional accessories

This section lists the optional accessories that you can purchase to help you with your probing tasks.

IC Micro-Grabber

Use the IC Micro-Grabber to probe the leads on integrated circuits that are surface-mounted. The IC Micro-Grabbers are easiest to use with the Y-Lead Adapter or Ground wires.

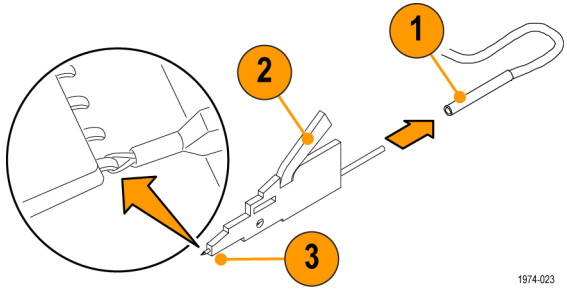

1. Push the IC Micro-Grabber onto the wire lead.
2. Press the lever to open the contacts.
3. Attach the IC Micro-Grabber to your circuit.

Order Tektronix part number:

- SMK4 quantity 4

TwinTip adapter

This accessory provides two adjustable tips for probing connections that are close to each other. The pin spacing adjusts from 0 to 0.31 in.

1. Push the adapter into the probe tip until it is seated. *Do not force the adapter.* Also, be careful not to injure yourself on the sharp points.
2. Adjust the spacing between the pins to suit your needs.
3. Probe your circuit.

Order Tektronix part number:

- 016-1786-XX quantity 4

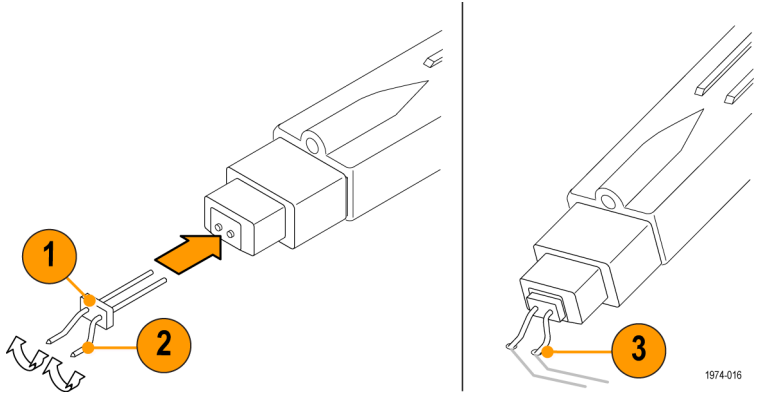

TwinFoot adapter

Use the TwinFoot adapter to probe two adjacent leads on a surface-mount integrated circuit. The flexible fingers adapt to a range of lead spacings.

1. Push the adapter into the probe tips until it is seated.
2. Touch the adapter to your integrated circuit leads. One side of the adapter pins are insulated to prevent short-circuiting to adjacent pins.

Order Tektronix part number:

- 016-1785-XX quantity 4

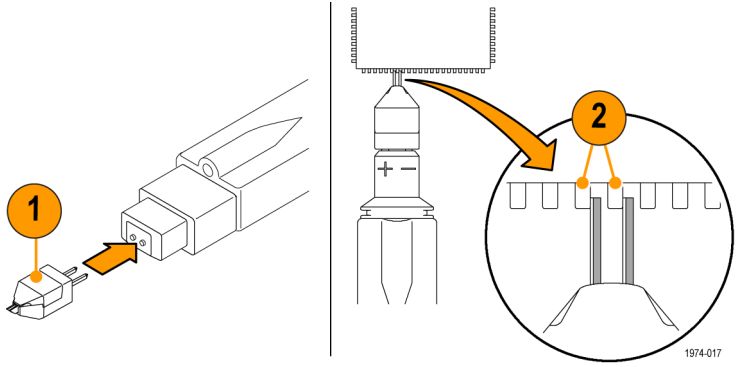

Spring-Loaded ground pin

Use the spring-loaded ground pin when you probe components that have a nearby ground point.

1. Connect the pin to the ground socket on the probe.
2. Probe your circuit.

Order Tektronix part number:

- 016-1782-XX quantity 6

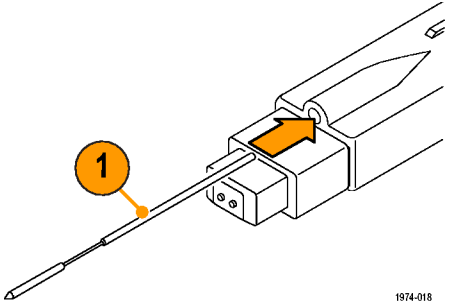

BNC-to-Probe tip adapter

Use this adapter for the performance verification tests. The adapter provides connections for signal sources, terminations, and probe test points. Instructions for use are included in the performance verification procedures.

Order Tektronix part number:

- 067-1734-XX

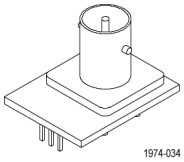

TekVPI calibration fixture

To verify probe performance, you must use the calibration fixture. The fixture provides an SMA connector in the probe signal path for internal probe measurements. Instructions for use are included in the performance verification procedures.

Order Tektronix part number:

- 067-1701-XX

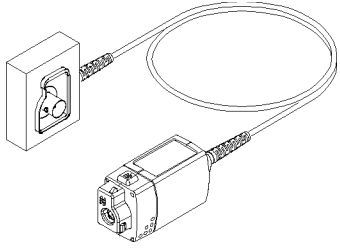

Options

Service options

- **Option CA1.** Provides coverage for a single calibration event
- **Option C3.** Calibration service 3 years
- **Option C5.** Calibration service 5 years
- **Option D1.** Calibration data report
- **Option D3.** Calibration data report, 3 years (with Option C3)
- **Option D5.** Calibration data report, 5 years (with Option C5)
- **Option R3.** Repair service 3 years
- **Option R5.** Repair service 5 years

Manual options

- **Option L0.** English language instruction manual
- **Option L5.** Japanese language instruction manual
- **Option L7.** Simplified Chinese language instruction manual

Probing principles

Read the helpful hints on the following pages to make probing easier and noise free.

Probe grounding

In addition to the (+) and (-) inputs on the probe head, there is also a ground (common) input. You can use the probe to take a differential measurement regardless of whether the ground is connected.

CAUTION. *To avoid damaging the circuitry under test, connect the probe ground (common) to a ground-reference point only.*

See the technical reference manual on the CD for more information.

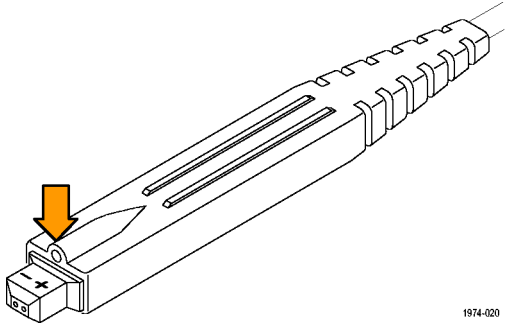

Input impedance and probe loading

When you connect the probe inputs to a circuit, you are introducing new resistance, capacitance, and inductance into the circuit. Each input of the differential probe has a characteristic input impedance of 100 kΩ to ground in parallel with less than 1 pF.

For signals with low source impedance and frequency, the 100 kΩ input impedance on each input is large enough to prevent the inputs from loading the signal sources. The greater the source impedances and the higher the signal frequencies, the more you should take these factors into account.

The more the impedance of the signal source on an input increases, the more the probe loads the source and reduces the signal amplitude.

The frequency of the signal also affects signal measurement. As the frequency of the signal increases, the input impedance of the probe decreases. The lower the impedance of the probe relative to that of the source, the more the probe loads the circuit under test and reduces the signal amplitude.

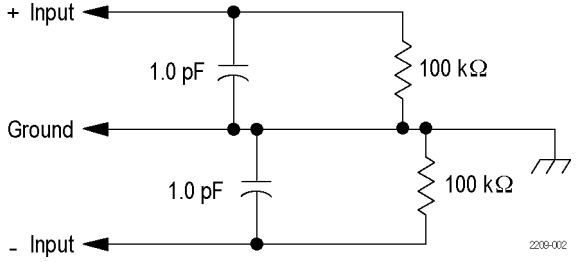

Maintenance

This section contains maintenance and support information for your probe.

Host instrument firmware

If some of the LEDs or features do not appear to function correctly, first go to www.tektronix.com/probe-support to check for probe/oscilloscope compatibility and to download the latest oscilloscope firmware. Read the release notes and other information associated with the firmware upgrades to learn about any anomalies that may exist with your probe/oscilloscope combination when using that version of firmware. It is good practice to periodically check the web site for new firmware versions that enhance the performance and capabilities of your Tektronix instruments.

To check the firmware version on Windows-based instruments, from the menu bar, click Help/About TekScope. On Linux-based instruments, press the Utilities button on the front panel. If you need to upgrade your instrument firmware, go to www.tektronix.com/software to download the latest firmware.

Error condition

If one of the Range LEDs does not remain lit after you connect the probe, an internal probe diagnostic fault exists. Disconnect and reconnect the probe to restart the power-on diagnostic sequence. If the symptoms continue, the probe is defective, and must be returned to Tektronix for repair.

Replacement parts

There are no user-replaceable parts within the probe. Refer to the accessory list for replaceable accessories for your probe.

Care and cleaning

Protect the probe from adverse weather conditions. The probe is not waterproof.



CAUTION. *To prevent damage to the probe, do not expose it to sprays, liquids, or solvents. Avoid getting moisture inside the probe during exterior cleaning.*

Do not use chemical cleaning agents; they may damage the probe. Avoid using chemicals that contain benzine, benzene, toluene, xylene, acetone, or similar solvents.

Clean the exterior surfaces of the probe with a dry, lint-free cloth or a soft-bristle brush. If dirt remains, use a soft cloth or swab dampened with a 75% isopropyl alcohol solution. A swab is useful for cleaning narrow spaces on the probe. Use only enough solution to dampen the swab or cloth. Do not use abrasive compounds on any part of the probe.

Index

A

Accessories
- optional, 33
- standard, 24

Adapter, fixed
- BNC-to-probe tip, 36
- straight pin tips, 25
- tip saver, 24
- TwinFoot, 35

Adapter, test
- PV, 37

Adapter, variable
- IC micro-grabber, 33
- Longhorn, 26
- MicroCKT Test Tip, 29
- solder-down, 27
- TwinTip, 34
- Y-lead, 28

Applications, 19
AutoZero, 17

C

Calibration, 9
Cleaning the probe, 42
Color Band Kit, 31
Connecting the probe, 3

D

Documentation, vii, 38

E

Environmental considerations, vi
Error condition, 41

F

Features, 1
Firmware, 41
Frequency derating graph, 2
Functional check, 7

G

Ground lead
- 3” lead, 30
- inductance, 40
- selecting length, 39
- spring-loaded pin, 36

I

Input limitations, 14
Instrument Firmware, 41

M

Maintenance, 41

O

Offset, 17
Operating considerations, 2
Options, 38

P

Probe controls
- Menu, 6
- Range, 5

Probe controls and indicators, 4
Probe head, 13

R

Range LED, 41
Related documentation, vii
Replacement parts, 42
Returning the probe, viii

S

Safety Summary, iii
Signal path compensation, 10

T

TekVPI, 3